REVISION RECORD		
REV:	CHANGE DESCRIPTION	BY / DATE
00	UPDATED PRINT RDM	04-01-2016

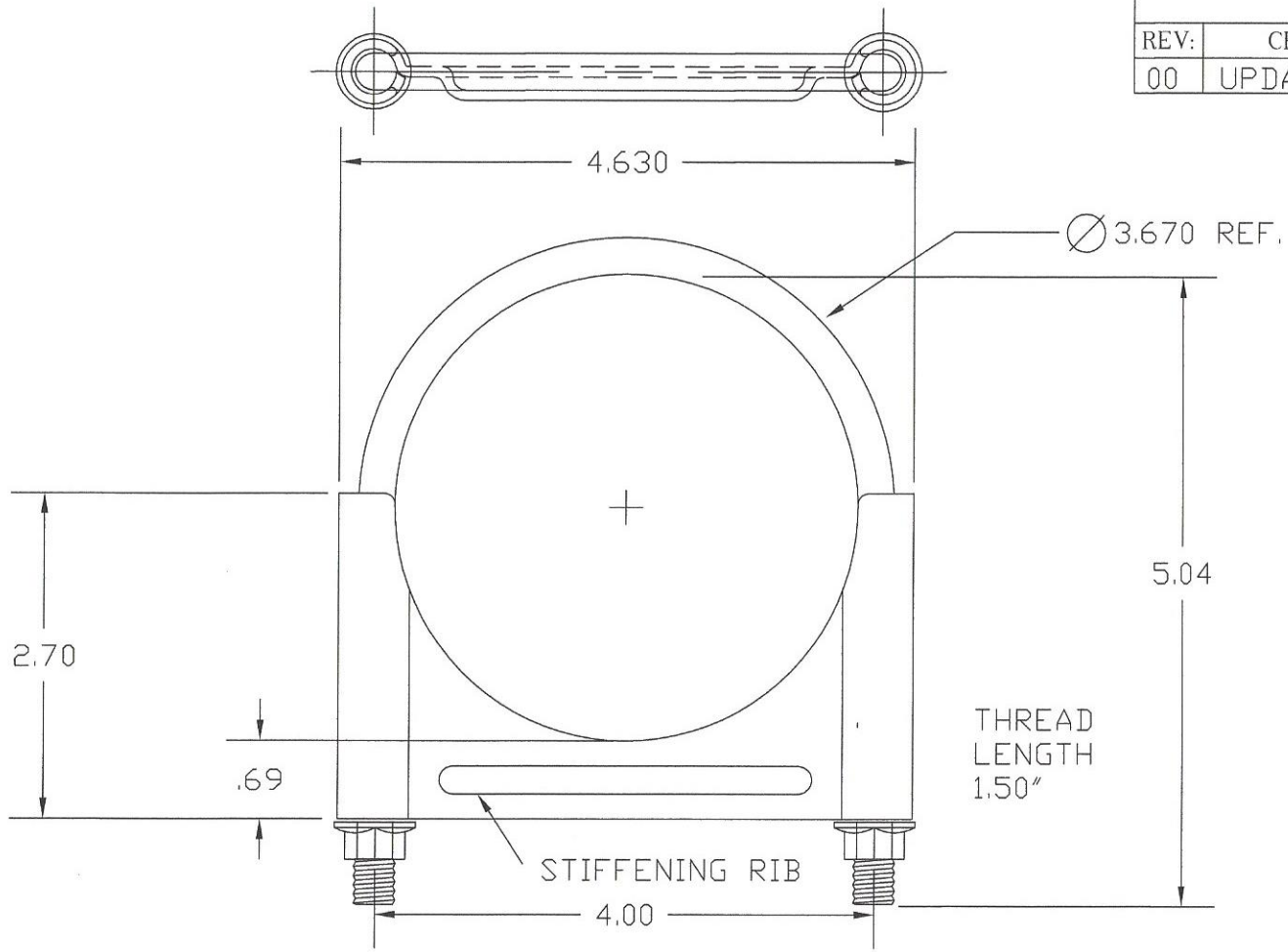

Ottawa Products Co.
1602 North Curtice Rd.
Curtice, OH 43412
www.ottawaproducts.com

MATERIAL:

SADDLE: C1008 H.R.P.O. X 13 GA.

U-BOLT: C1018 COLD DRAWN STEEL X .330 DIA.

*FINISH:

PER CUSTOMER REQUIREMENTS

This print or drawing shall be used only with reference to contracts or proposals of Ottawa Products Co., Inc. This print or drawing shall not be copied for, reproduced for, nor exibited to outside parties. This print or drawing and any and all copies thereof shall be returned to Ottawa Products Co. upon request. Anything disclosed herein not publicly available shall not be used without written permission of Ottawa Products Co. Ottawa Products Co. reserves the right to change specifications and/or designs without prior notice or obligation.

3RD ANGLE PROJECTION

UNLESS OTHERWISE SPEC. DIMS. IN INCHES

STD. TOLERANCES
.XX ±.060
.XXX ±.030
FRAC. DIM. ± 1/32

SCALE: NONE

TITLE

3 1/2" H.D. GUILLOTINE ASSEMBLY

DRAWN BY: MDR	DATE: 05-01-04
CHECKED BY: R.D. MILLER	DATE: 06-01-04
DRAWING NUMBER G350	REV -